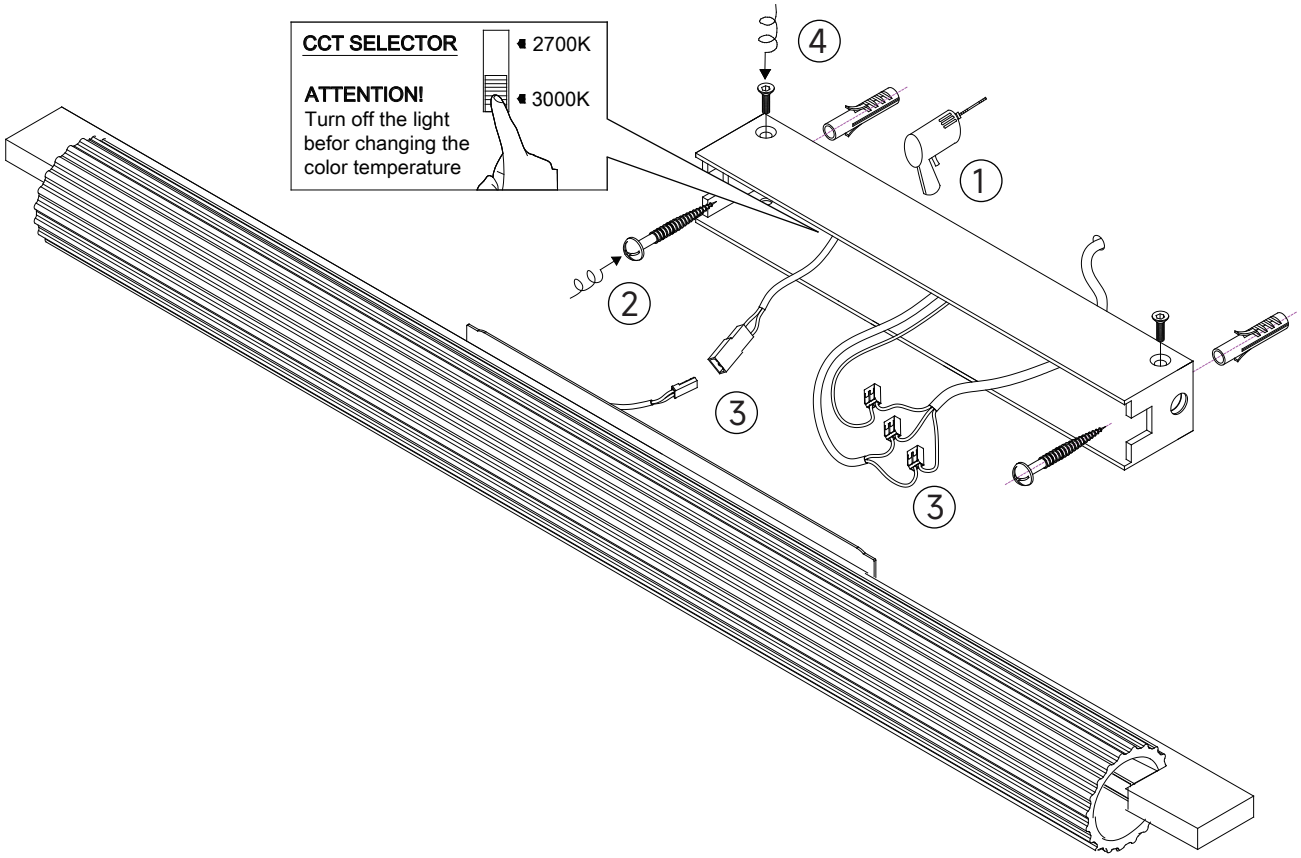
CCT SELECTOR
2700K
3000K
ATTENTION!
Turn off the light
befor changing the
color temperature
4
1
2
3
3

